data sheet

+J01001.GT-06
STEP SPRING RIDER



Dimensions

Safety area	Impact area	Falling height HIC	Physical footprint	Number of users
3,3 x 2,3 m	0 mq	90 cm	1,3 x 0,3 x 0,8 m	2

Characteristics

stainless steel screws

use under surveillance

Age range

From 3 to 12 years

Materials

2 hdpe

Made of high density polyethylene.

Manufacturer

Pozza 1865 S.R.L.

Country of manufacturing

ITALY

Plan

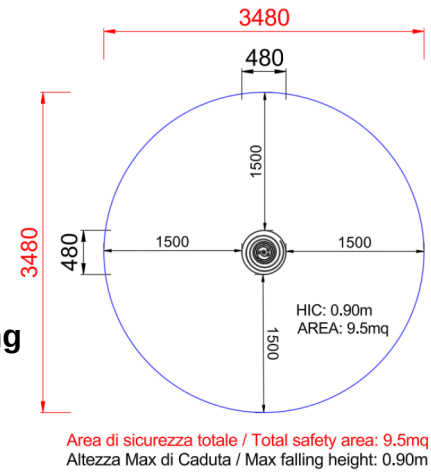

Area di sicurezza totale / Total safety area: 9.5mq
Altezza Max di Caduta / Max falling height: 0.90m

Picture

