data sheet

+C0500.PAL-06.SW-14
SMALL GYM TOWER



Dimensions

Safety area	Impact area	Falling height HIC	Physical footprint	Number of users
11,8 x 7,5 m	52.5 mq	290 cm	7,3 x 2,5 x 2,8 m	15

Characteristics

stainless steel screws

Age range

From 3 to 12 years

Materials

GALVANIZED AND PAINTED STEEL

Hot-dip galvanized and powder coated or powder galvanized and powder coated steel construction of 90 x 90 mm or 120 diameter profile

Plan

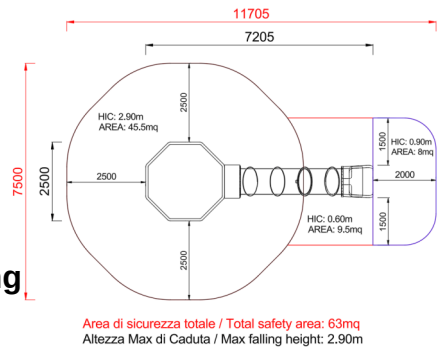

Area di sicurezza totale / Total safety area: 63mq
Altezza Max di Caduta / Max falling height: 2.90m

Picture



Manufacturer

Pozza 1865 S.R.L.

Country of manufacturing

ITALY