data sheet

+AF301H19_ALU

SATURNO CON SCIVOLI - FANTASY



Dimensions

Safety area	Impact area	Falling height HIC	Physical footprint	Number of users
14,7 x 10,8 m	76.5 mq	190 cm	11,2 x 7,4 x 4,3 m	40

Characteristics

2 hdpe

stainless steel screws

use under surveillance

Age range

Da 3 a 12 anni

Materials

anodised aluminium

Made of EN EV6060 anodized alumium 9x9cm custom mold with rounded edges, minimum thickness 2,7mm

inclusive

Manufacturer

Pozza 1865 S.R.L.

Country of manufacturing

ITALY

Plan

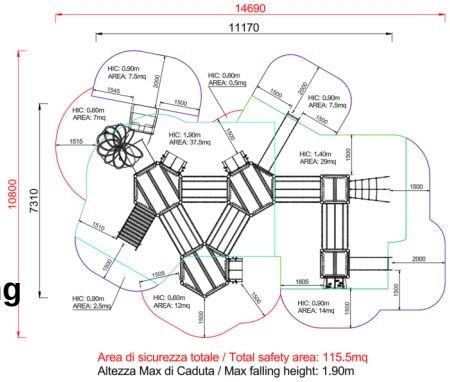

Picture



Components list

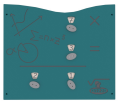

xABACOGT-02_ALU - NG Multiplication Panel Fantasy
N. 1 .



xABACOGT-03_ALU - NG Calculator Panel
NR 1 .



xBV-10_ALU - NG Braille Panel
N. 1 .



xBV-11_ALU - NG Activity geometry game
NR 1 Activity geometry game made of coated steel rope and fixed to the load-bearing structure by passing through concealed bolts, two-color HDPE polyethylene engraved with activity path and figures. All hardware and fasteners in stainless steel



xBV-2_ALU - NG Gear panel Fantasy
N. 1 Vertical panel made of polyethylene and wood shelf.



xBV-3.1_ALU - NG Globe Panel
NR 1 .



xBV-4_ALU - NG Activity panel Fantasy
N. 1 Made of colored polyethylene, sandwich type, with flow lanes, rotating disk and central knob



xBV-7.1_ALU - NG Musical Panel Fantasy
N. 1 Polyethilene music panel with Steel tubes and a rubber hammer to play music on



xC24_ALU - NG Balcony Fantasy
N. 1 Made of painted steel, provided with stainless steel brackets for fixing them to the tower.

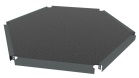

xC3_ALU - NG Esagonal platform
NR 2 Made of non-slip material



xGT-02_ALU - NG Flexible seat
N. 1 Flexible seat made of rubber with stainless steel supports



xHT5-14_ALU - NG Esagonal tower h 140 cm with roof Fantasy
N. 1 Composed of 6 posts having a 9 x 9 cm section by lamellar wood, 1 esagonal platform placed at a height of 140 cm. Coloured gable roof



xHT5-19_ALU - NG Esagonal tower h 190 cm with roof Fantasy
N. 1 Composed of 6 posts having a 9 x 9 cm section by lamellar wood, 1 esagonal platform placed at a height of 190 cm. Coloured gable roof



xHT6-0_ALU - NG Hexagonal tower less roof-1
N. 1 made of 6 aluminum beams, 1 hexagoal platform and mounted at 00 cm height



xP-2.1 _ALU - NG Porthole Themed Panel
NR 2 .

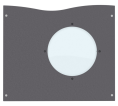

xP-2_ALU - NG Protection lateral panels with polycarbonate portholes Fantasy
N. 1 Made of polyethylene, with polycarbonate portholes, provided with stainless steel brackets for fixing them to the tower.



xP-3C_ALU - NG Panels inside-out
N. 1 Made of polyethylene shaped with a central geometric hole, provided with stainless steel brackets for fixing them to the tower



xP-3Q_ALU - NG Panels inside-out-1 Fantasy
N. 1 Made of polyethylene shaped with a central geometric hole, provided with stainless steel brackets for fixing them to the tower



xP-3T_ALU - NG Panels inside-out-2 Fantasy
N. 1 Made of polyethylene shaped with a central geometric hole, provided with stainless steel brackets for fixing them to the tower



xP-7.1_ALU - NG Simple Turquoise Panel
N. 2 .



xP-7_ALU - NG Simple Lime Panel
N. 1 Panel made of HDPE polyethilene, bi-color 86cm in width with drawing on the outer layer. all the fixing elements in Stainless steel

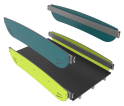

xPD-10_ALU - NG Fixed right bridge Fantasy
N. 4 Walkway made of aluminium, with polyethylene parapets



xPI-12_ALU - NG CLOSED TIBETAN INCLINED TUNNEL
N. 1 TIBETAN TUNNEL MADE OF STEEL CORD COVERED BY NYLON



xPI-5_ALU - NG Inclined mobile bridge
N. 1 Made of impregnated wood, with laminated wood beams oscillating hanging on to the handrail with steel ropes coated



xQT4-14_ALU - NG Square tower h140 cm Fantasy
N. 1 Composed of 4 posts having a 9 x 9 mm section by aluminium, 1 square platform placed at a height of 140 cm. Coloured polyethylene gable roof



xQT4-9_ALU - NG Square tower h 90cm style Fantasy
N. 1 Composed by 4 posts having a 10 cm diameter by anodized steel, 1 square platform placed at a height of 90 cm. Coloured polyethylene gable roof



xRH-1_ALU - NG Access ramp suitable for disabled people
N. 3 Made of alluminium.



xS-19_ALU - NG Climbing ladder h190 cm Fantasy
N. 1 STAIR MADE OF ALUMINUM H190



xS6-14_ALU - NG Shroud lift h140 cm
N. 1 Composed by climbing net in steel rope. Included by thrust bar



xSCL1-9_ALU - NG Free-climbing inclined ramp h 90 cm
N. 1 H90 Climbing platform - Made of an HDPE panels with anti slip coating, resin climbing holds on top. Support structure made of painted and galvanized steel. All fixing elements made of stainelss steel



xSVPX-14_ALU - NG Straight slide h140 cm Fantasy
N. 1 slide with lateral sides made of polyethylene and stainless steel slide certified according to the existing rules; starting platform height 140 cm; provided with a transversal bar.



xSVPX-9_ALU - NG Straight slide h90 cm Fantasy
N. 1 slide with lateral sides made of polyethylene and stainless steel slide certified according to the existing rules; starting platform height 90 cm; provided with a transversal bar.



xSW-E-19_ALU - NG Tube Slide h190 (spiral)
NR 1 .

METODO DI FISSAGGIO A TERRA DEI MONTANTI DEL GIOCO: Attrezzatura predisposta per fissaggio a terra mediante l'utilizzo di appositi telai metallici.

INFORMAZIONI RELATIVE ALL'ISPEZIONE: Ispezione visiva periodica - Controllo della pulizia dell'attrezzatura - Controllo degli interspazi tra terreno ed attrezzatura - Controllo della consistenza del terreno - Controllo delle fondamenta - Controllo degli spigoli - Controllo dell'eventuale mancanza di parti - Controllo dell'usura eccessiva delle parti mobili (snodi e boccole) - Controllo dell'integrità dell'intera attrezzatura. Per le aree gioco soggette ad uso intensivo o vandalismo può essere necessaria un'ispezione giornaliera. Ispezione annuale periodica: Potrebbe rendersi necessario lo smontaggio di alcune parti per la verifica

Copyright (C) POZZA 1865 S.r.l. - P.IVA IT02311670224 - info@pozza.it