data sheet

+AF104K_M_ALU
ROMA - MEDIEVAL



Dimensions

Safety area	Impact area	Falling height HIC	Physical footprint	Number of users
10,4 x 10,4 m	53.5 mq	140 cm	6,9 x 6,9 x 3 m	30

Characteristics

stainless steel screws

use under surveillance

Age range

Da 3 a 12 anni

Materials

anodised aluminium

Made of EN EV6060 anodized alumium 9x9cm custom mold with rounded edges, minimum thickness 2,7mm

Plan

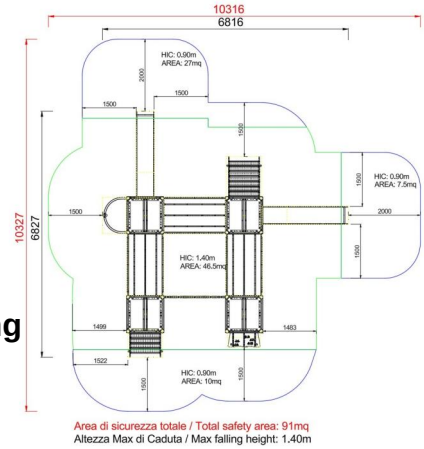

Picture



Manufacturer

Pozza 1865 S.R.L.

Country of manufacturing

ITALY