data sheet

+AF104K.QT4-19_ALU
ROMA CON SCIVOLO A TUBO - FANTASY



Dimensions

Safety area	Impact area	Falling height HIC	Physical footprint	Number of users
9,7 x 14,4 m	69 mq	190 cm	6,4 x 10,4 x 4 m	30

Characteristics

2 hdpe

stainless steel screws

use under surveillance

Age range

Da 3 a 12 anni

Materials

anodised aluminium

Made of EN EV6060 anodized alumium 9x9cm custom mold with rounded edges, minimum thickness 2,7mm

inclusive

Plan

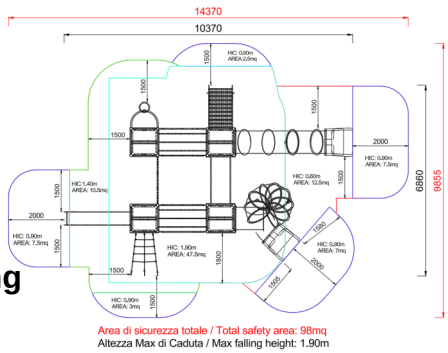

Picture



Manufacturer

Pozza 1865 S.R.L.

Country of manufacturing

ITALY

Components list



xABACOGT-01_ALU - NG OXO Panel Fantasy
N. 1 Two colored polyethylene panel with serigraphy XOX symbols, 9 half-moon rolling panels, Inox steel bolts.



xABACOU0600-N_ALU - NG Panel with numbers-1 Fantasy
N. 1 Made of colored polyethylene, sandwich type, with central rotating disk.



xBV-3_ALU - NG Galaxy panel Fantasy
N. 1 Vertical panel made of polyethylene



xBV-4_ALU - NG Activity panel Fantasy
N. 1 Made of colored polyethylene, sandwich type, with flow lanes, rotating disk and central knob



xBV-6_ALU - NG Shop panels Fantasy
N. 1 Vertical panel made of polyethylene and wood shelf.

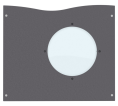

xP-2_ALU - NG Protection lateral panels with polycarbonate portholes Fantasy
N. 1 Made of polyethylene, with polycarbonate portholes, provided with stainless steel brackets for fixing them to the tower.



xP-7.1_ALU - NG Simple Turquoise Panel
N. 1 .



xP-7_ALU - NG Simple Lime Panel
N. 1 Panel made of HDPE polyethilene, bi-color 86cm in width with drawing on the outer layer. all the fixing elements in Stainless steel



xPAL-02_ALU - NG Linear Gym-2
N. 1 Vertical net with frame made of lamellar wood beams fixed through disappearing and passing nuts and bolts Bars realized with stainless steel tubular pegs, mounted into two lateral wooden supports Climbing cord

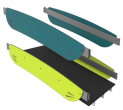

xPI-10_ALU - NG Fixed inclined bridge Fantasy
N. 2 Walkway made of aluminium, with steel parapets.



xPS-14_ALU - NG Spiral perch h 140 cm
N. 1 Composed bystainless steel tubular, support bracket and locking handles in painted steel



xQT12-14_ALU - NG Square tower h140 cm
N. 1 .



xQT12-19_ALU - NG Tower h190 with tubular roof
NR 1 .



xQT4-14_ALU - NG Square tower h140 cm Fantasy
N. 1 Composed of 4 posts having a 9 x 9 mm section by aluminium, 1 square platform placed at a height of 140 cm. Coloured polyethylene gable roof



xQT4-19_ALU - NG Square tower h 190 cm: Fantasy
N. 1 Composed by 4 posts having a 9 x 9 cm section by aluminium, 1 square platform placed at a height of 190 cm. Coloured polyethylene gable roof



xS-19_ALU - NG Climbing ladder h190 cm Fantasy
N. 1 STAIR MADE OF ALUMINUM H190



xS4-14_ALU - NG Steel ladder h140 cm
N. 2 Rungs made of stainless steel. Complete with steel bar.



xS6-14_ALU - NG Shroud lift h140 cm
N. 1 Composed by climbing net in steel rope. Included by thrust bar



xSW-19_ALU - NG Tube-shaped slide h 190 cm diameter 80 cm Fantasy
N. 1 Polyethylene slide certified according to the existing rules; starting platform height 190 cm



xSW-E-19_ALU - NG Tube Slide h190 (spiral)
NR 1 .

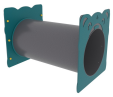

xTT-17_ALU - NG Polyethylene Tunnel Fantasy
N. 1 Made of polyethylene provided with panels of connection to polyethylene turrets

METODO DI FISSAGGIO A TERRA DEI MONTANTI DEL GIOCO: Attrezzatura predisposta per fissaggio a terra mediante l'utilizzo di appositi telai metallici.

INFORMAZIONI RELATIVE ALL'ISPEZIONE: Ispezione visiva periodica - Controllo della pulizia dell'attrezzatura - Controllo degli interspazi tra terreno ed attrezzatura - Controllo della consistenza del terreno - Controllo delle fondamenta - Controllo degli spigoli - Controllo dell'eventuale mancanza di parti - Controllo dell'usura eccessiva delle parti mobili (snodi e boccole) - Controllo dell'integrità dell'intera attrezzatura. Per le aree gioco soggette ad uso intensivo o vandalismo può essere necessaria un'ispezione giornaliera. Ispezione annuale periodica: Potrebbe rendersi necessario lo smontaggio di alcune parti per la verifica

Copyright (C) POZZA 1865 S.r.l. - P.IVA IT02311670224 - info@pozza.it