data sheet

+S0800_P

PRIMITIVE T-REX SLIDE



Dimensions

Safety area	Impact area	Falling height HIC	Physical footprint	Number of users
8,3 x 4 m	0 mq	90 cm	4,8 x 1 x 4 m	2

Characteristics

- stainless steel screws
- use under surveillance

Age range

From 3 to 12 years

Materials

- chestnut wood

Made of chestnut or black locust tree, peeled, smoothed, and with a natural and colored finish.

Plan

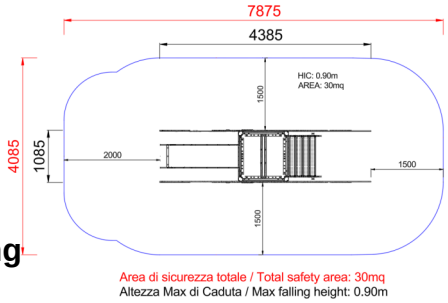

Picture



Manufacturer

Pozza 1865 S.R.L.

Country of manufacturing

ITALY