data sheet

+AF102P.PD-6_ALU

MERLINO CON PONTE TIBETANO - FANTASY



Dimensions

Safety area	Impact area	Falling height HIC	Physical footprint	Number of users
10,4 x 5,1 m	31.5 mq	140 cm	6,9 x 2,1 x 0 m	8

Characteristics

use under surveillance

Age range

3-12

Materials

anodised aluminium

Made of EN EV606 Made of high density polyethylene mold with rounded edges, minimum thickness 2,7mm

2

hdpe

Plan

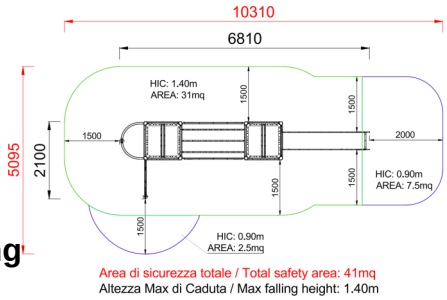

Area di sicurezza totale / Total safety area: 41mq
Altezza Max di Caduta / Max falling height: 1.40m

Picture



Manufacturer

Pozza 1865 S.R.L.

Country of manufacturing

ITALY