data sheet

+C0500.P-3Q
GIOVANNI THE SNAKE

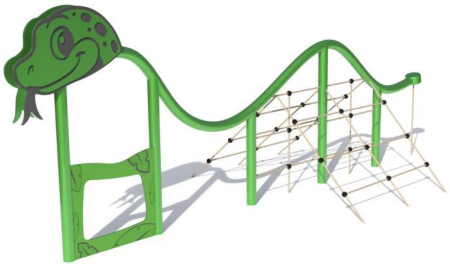

Dimensions

Safety area	Impact area	Falling height HIC	Physical footprint	Number of users
8 x 5,3 m	0 mq	90 cm	5 x 2,3 x 1,9 m	10

Characteristics

stainless steel screws

Age range

From 3 to 12 years

Materials

GALVANIZED AND PAINTED STEEL

Hot-dip galvanized and powder coated or powder galvanized and powder coated steel construction of 90 x 90 mm or 120 diameter profile

Plan

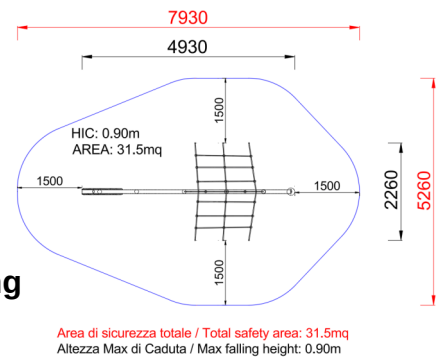

Area di sicurezza totale / Total safety area: 31.5mq
Altezza Max di Caduta / Max falling height: 0.90m

Picture

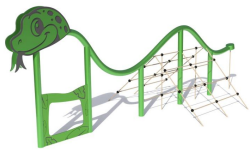

Manufacturer

Pozza 1865 S.R.L.

Country of manufacturing

ITALY