data sheet

+AS102.TT-17_ALU
CATERPILLAR PLAY STRUCTURE TWO TOWERS



Dimensions

Safety area	Impact area	Falling height HIC	Physical footprint	Number of users
5,8 x 9,9 m	0 mq	90 cm	2,8 x 6,4 x 2,8 m	10

Characteristics

stainless steel screws

use under surveillance

Age range

From 3 to 12 years

Materials

anodised aluminium

Made of EN EV6060 anodized alumium 9x9cm custom mold with rounded edges, minimum thickness 2,7mm

Plan

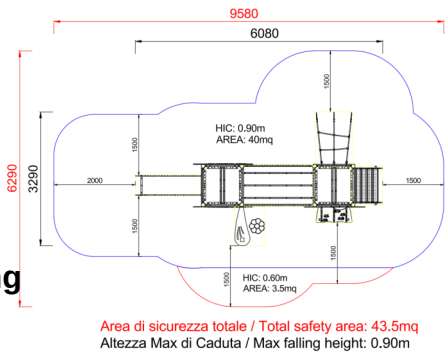

Area di sicurezza totale / Total safety area: 43.5mq
Altezza Max di Caduta / Max falling height: 0.90m

Picture



Manufacturer

Pozza 1865 S.R.L.

Country of manufacturing

ITALY