data sheet

+AS100BGS.S-9_ALU

APRICOT 2 TOWERS WITH LADDER

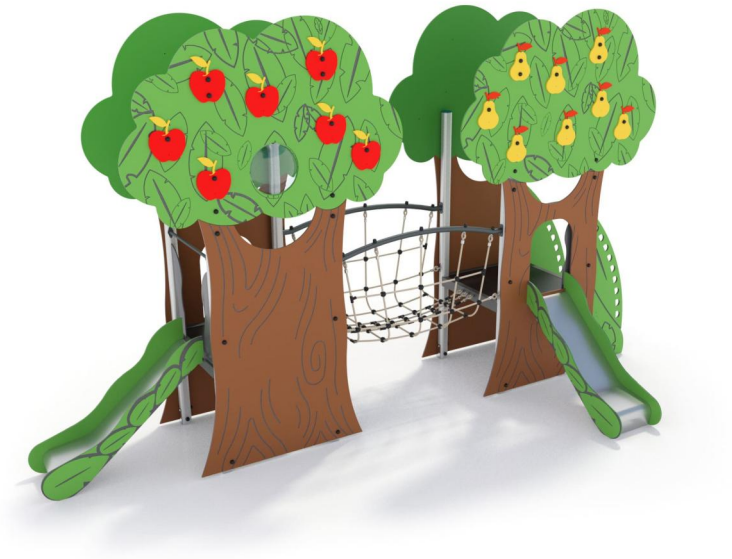

Dimensions

Safety area	Impact area	Falling height HIC	Physical footprint	Number of users
9,9 x 6,5 m	0 mq	90 cm	6,4 x 3,2 x 0 m	8

Characteristics

stainless steel screws

use under surveillance

Age range

From 3 to 12 years

Materials

anodised aluminium

Made of EN EV6060 anodized alumium 9x9cm custom mold with rounded edges, minimum thickness 2,7mm

Plan

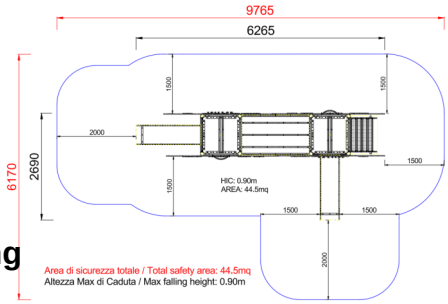

Picture

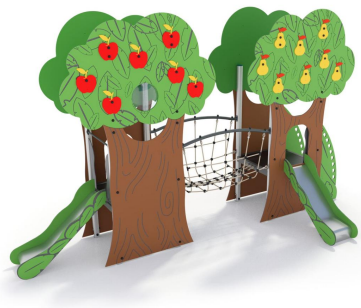

Manufacturer

Pozza 1865 S.R.L.

Country of manufacturing

ITALY